ALERT POINT

FEATURES and BENEFITS

- Stand alone, self contained alarm system. No wiring involved, simple 4 screw installation, protecting personnel and property within minutes.
- Battery powered (incorporates 12/24V dc facility), 9V PP3 battery supplied.
- Robust polycarbonate housing, can take the severest of knocks.
- Integral resettable call point, simple key to reset, no broken glass or parts to replace.
- Visible warning flag & flashing LED, for quick activation identification.
- Variety of sounder tone, output and duration options. Select a tone that personnel can quickly identify with.
- 102 dB integral sounder (at 1m), draws immediate attention.
- System healthy, fault and alarm LED indication, to ensure the Alert Point is fully operational.
- Low battery warning, provides an 15 month stand-by life.
- Can be linked to sounders, strobes, call points & detectors, providing an extra level of protection.
- Can be interconnected and monitored, creates a network of protection.
- Available in a choice of colours, to accommodate a variety of applications.
- Standard or custom marking, that best fits your requirements.
- Now available with optional beacon upgrade

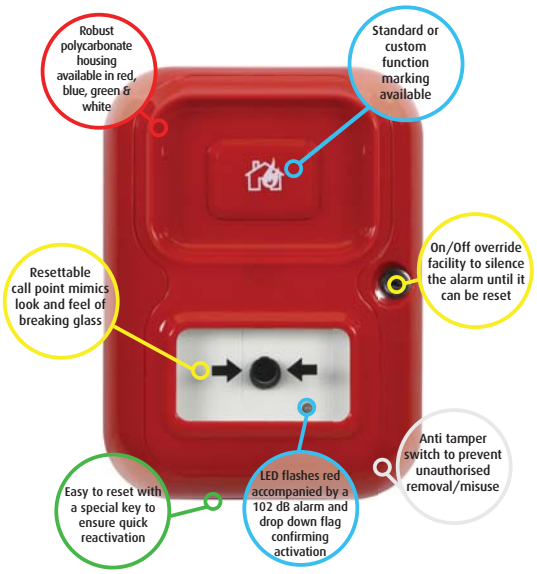

STI ALERT POINT

The Alert Point is an aesthetically pleasing, robust and fully featured stand alone alarm system. Powered with a 9v PP3 alkaline battery, the Alert Point includes an integral sounder and resettable call point.

Manufactured from tough polycarbonate, the Alert Point is designed for use in industrial, commercial and retail applications as well as portacabins, construction sites, car parks, churches and holiday parks. It also incorporates a tamper switch to prevent unauthorised removal or misuse.

Available in a variety of colours, the Alert Point can be used for a wide variety of applications such as Fire, Intruder, Panic, Evacuation, Assist or General alarm.

HOW IT WORKS

Once activated the Alert Point will emit a 102 dB alarm (at 1m), an activation flag drops in to view and the built in LED facility flashes red. Any external connected devices will be activated. The Alert Point can be easily reset with a special key, ensuring that the unit is quickly operational again. An override facility can silence the alarm until the Alert Point can be reset.

PROTECTING YOUR PREMISES AND PERSONNEL

The Alert Points can be interconnected and have the ability to monitor each other to create a network of protection.

A 12/24 V dc external power connection is incorporated in the Alert Point to support external devices such as sounders and strobes.

With an easy, 4 screw, wire-free installation, this truly versatile product is the ideal solution for establishments that have a requirement for a simple, but effective alarm system.

ALERT POINT:*LITE*

The newest model to the Alert Point range, the Alert Point:*Lite,* shares many of the features of the Alert Point with some exceptions. Details on the product features can be found overleaf. The Alert Point:*Lite* is an integral self-contained sounder and resettable call point that is an ideal solution for establishments that require a simple, cost-effective means of raising an alarm in the event of an emergency.

▼ How to order

All Alert Point part numbers begin with AP and contain 4 other characters E.G. AP-1-R-A/CN = Alert Point, red with House/Flame Logo and no cover.

AP — 1 — R — A / CN

- **AP** – Prefix
- **1** – Denotes Series option
  - 1 = Alert Point
  - 2 = Alert Point:*Lite*
  - 3 = Alert Point w/beacon
  - 4 = Alert Point:*Lite* w/beacon
- **R** – Denotes colour option
  - R = Red
  - G = Green
  - B = Blue
  - W= White
- **A** – Denotes function marking option
  - A = House/Flame
  - B = Fire
  - C = Intruder
  - D = Panic
  - E = Evacuation
  - F = Assist
  - G = General Alarm
  - H = Alert
  - I = Emergency Exit
  - X = CUSTOM MARKING
- **CN** – Denotes optional cover
  - CN = No Cover
  - CS2 = Stopper II
  - CW2= Weather Stopper II

Your Alert Point Part Number:		Series Required	Colour Required	Function Marking Required	Cover Required
Part Number	AP				

CUSTOM MARKING

If custom marking is required, please print in the boxes below:-

Maximum 20 characters (includes spaces)

EXAMPLE:- Your custom marking will appear here

SPECIFICATION

▼ Alert Point & Alert Point:*Lite* **Components**

	Alert Point	Alert Point:*Lite*
9V PP3 Battery Power Source	✓	✓
External Power Terminals (12 to 24 vdc)	✓	X
Network Terminals	✓	✓
Relay Terminals (24V dc, 1A)	✓	X
Sounder Output Terminals	✓	✓
Beacon Output Terminals	✓	X
Detector & MCP Input Terminals	✓	X
Tamper Switch	✓	X
LED	✓	X
Internal Beacon	✓	✓
Master Key	✓	✓
ReSet Key	✓	✓
Volume High/Low Terminals	✓	✓

▼ Alert Point & Alert Point:*Lite* **Features**

	Alert Point	Alert Point:*Lite*
Sounder Durations (continuous, 30 secs, 2 mins & 20 mins)	✓	✓
Beacon Time Durations (continuous, 30 secs, 2 mins & 20 mins)	✓	X
7 Tones	✓	✓
LED Healthy/Fault Indications	✓	X
Tamper Tone	✓	X
Smoke Detector & MCP Connectivity	✓	X
Low Battery Indication - Beep (90 secs)	✓	✓ (NB: 1 short beep)
Low Battery Indication - LED Flash (RED)	✓	X
Networkable	✓	✓
Network Fault Indication - Beep (90 secs)	✓	✓ (NB: 2 short beeps)
Auto/ Manual Reset Override	✓	✓
Sounder Output Level 95 (low) - 102 dB (high)	✓	✓
High/ Low Volume Option	✓	✓
Beacon Upgrade Option	✓	✓

▼ Alert Point & Alert Point:*Lite* **Specifications**

Housing Material	Polycarbonate
Electrical Contact Material	Silver Plated Brass
IP Rating	Indoor
Operating Temperature	0°C to 49°C
Installation Terminal Conductor Size	0.5 mm to 2.5 mm
Standby Current	45 uA
Alarm Current (running from battery only)	28 mA - low volume 32 mA - High volume
Cable Entries	7 Cable Entries
Weight	490 g
Dimensions	125 mm w x 170 mm x 58 mm d
Colours	Red, Green, Blue & White

▼ Alert Point & Alert Point:*Lite* **Dimensions**

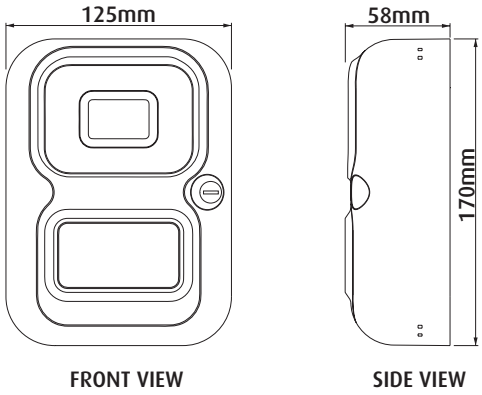

▼ Alert Point **Supporting Input & Output Devices**

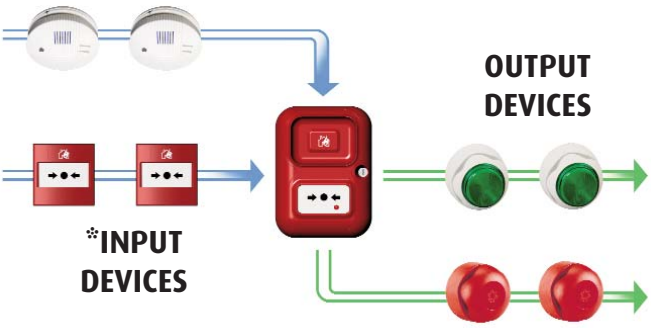

*compatible with any detector which has a built in relay output option

▼ Alert Point **Typical Application**

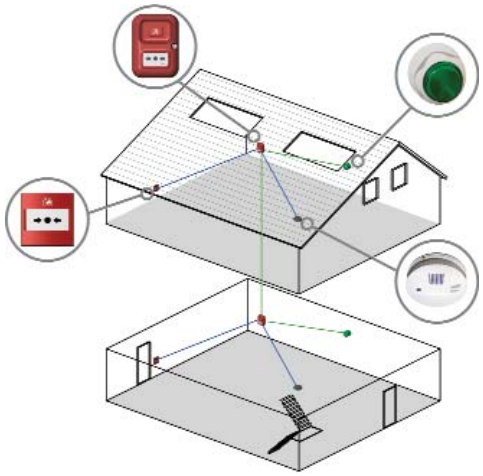

Safety Technology International (Europe) Ltd
Unit 49G Pipers Road • Park Farm Ind. Est. • Redditch • Worcestershire • B98 0HU • England
Tel: 44 (0) 1527 520 999 • Freephone 0800 085 1678 (UK only)• Fax: 44 (0) 1527 501 999 • Email: info@sti-europe.com • Web: www.sti-europe.com
Head Office • Safety Technology International, Inc. • 2306 Airport Road • Waterford • Michigan • 48327 • USA
Tel: 001 248 673 9898 • Fax: 001 248 673 1246 • Toll Free: 0800 888 4STI (USA only) • Email: info@sti-usa.com • Web: www.sti-usa.com

AP Spec. Rev. 06/10 Printed in England

NEED SALES OR TECHNICAL SUPPORT? CALL FREEPHONE 0800 085 1678 (UK). T: +44 (0)1527 520 999