| DRG.No. C51383/A | TITLE | RS4 (4 WAY) DISABLED REFUGE WITH LOCAL TOILET ALARM SCHEMATIC – LOOP WIRED | REF. |
|---|---|---|---|

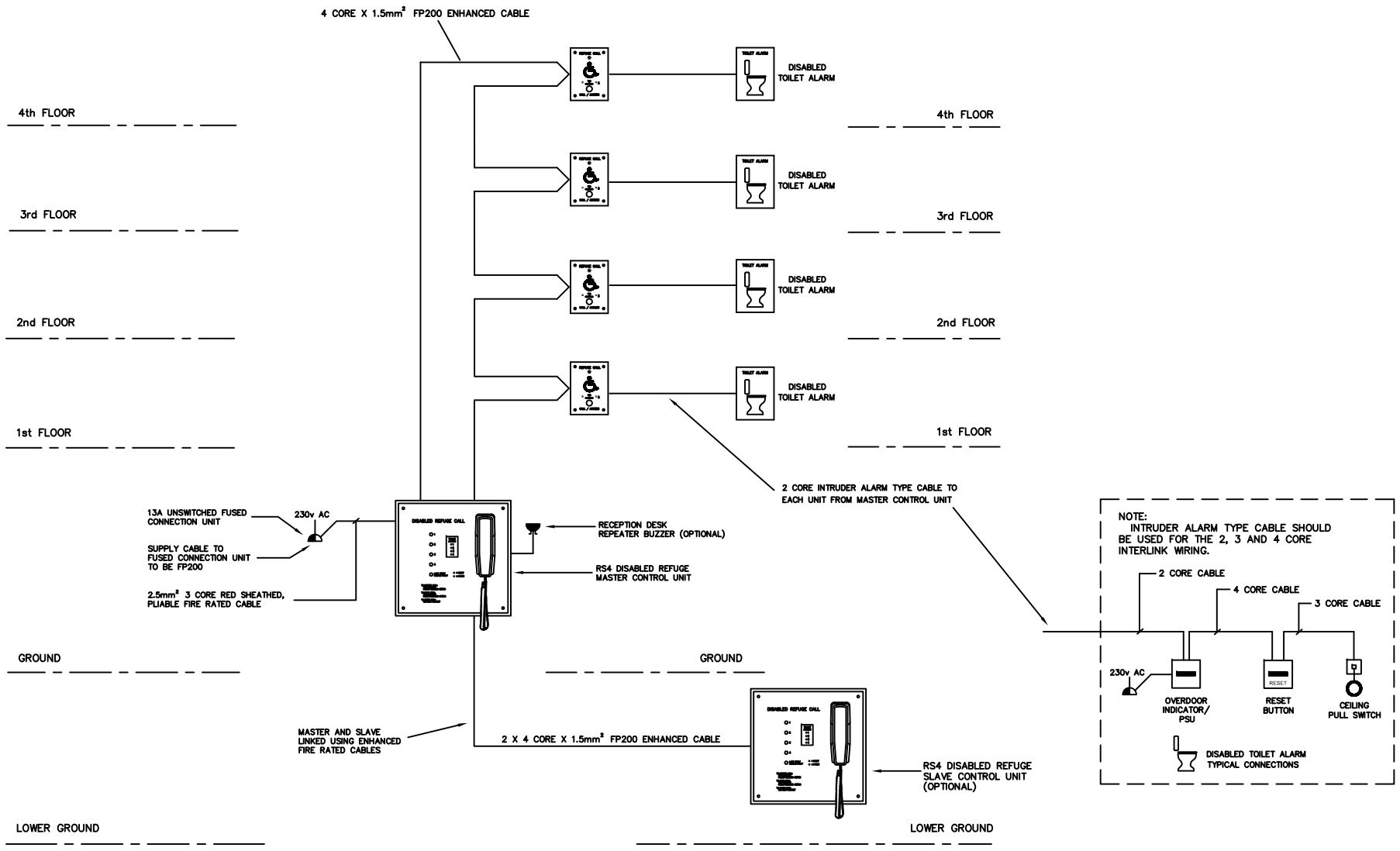


| ISSUE | DATE | MODIFICATION | DRN. | CHD. |
|---|---|---|---|---|
| | | | | |


CAMEO SYSTEMS LTD
29 HAVILAND ROAD
FERNDOWN INDUSTRIAL ESTATE
WIMBORNE, DORSET, BH21 7SA ENGLAND
TEL (01202)892088
FAX (01202)861449


| DRAWN | DATE | SCALE | CHECKED | APRD. |
|---|---|---|---|---|
| K.C.B. | 12.06.13 | --- | | |
| DRAWING NO. C51383 | | | ISSUE A | |